(No Model.) 2 Sheets—Sheet 1

S. B. LETSON.

WASHING MACHINE.

No. 489,609. Patented Jan. 10, 1893.

FIG. 1.

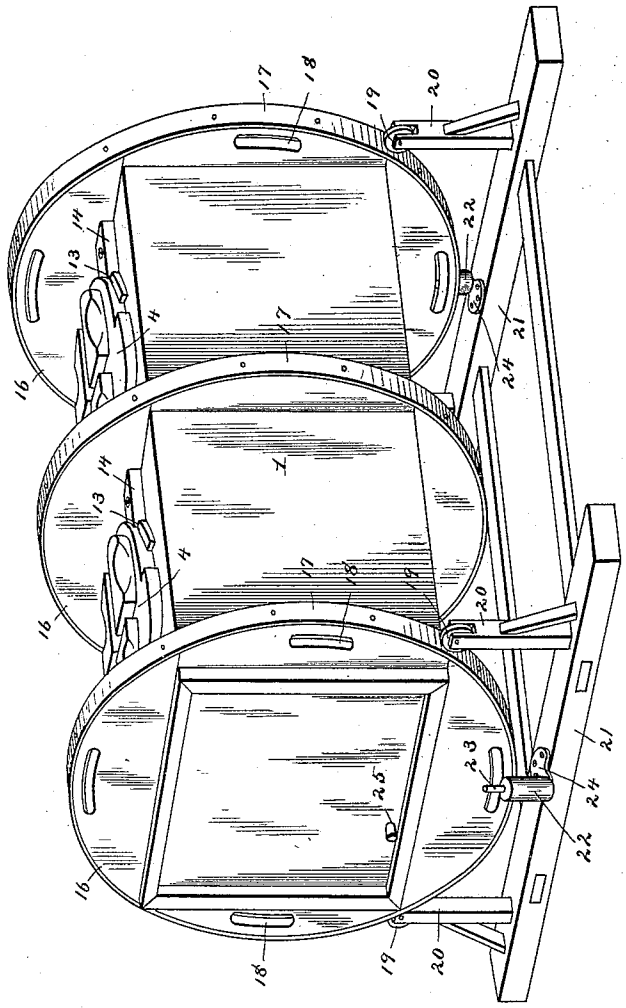

Witnesses

Harry L. Amer

N. C. Riley

Inventor

Samuel B. Letson.

By his Attorneys,

C. A. Snow & Co.

THE NORRIS PETERS CO., PHOTO-LITHO., WASHINGTON, D. C.

(No Model.) 2 Sheets—Sheet 2.

S. B. LETSON.

WASHING MACHINE.

No. 489,609. Patented Jan. 10, 1893.

FIG. 2.

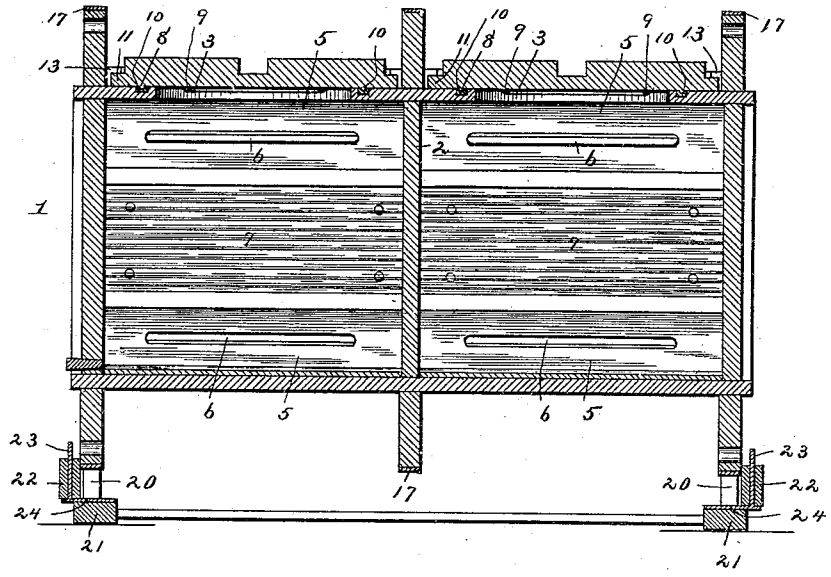

FIG. 3.

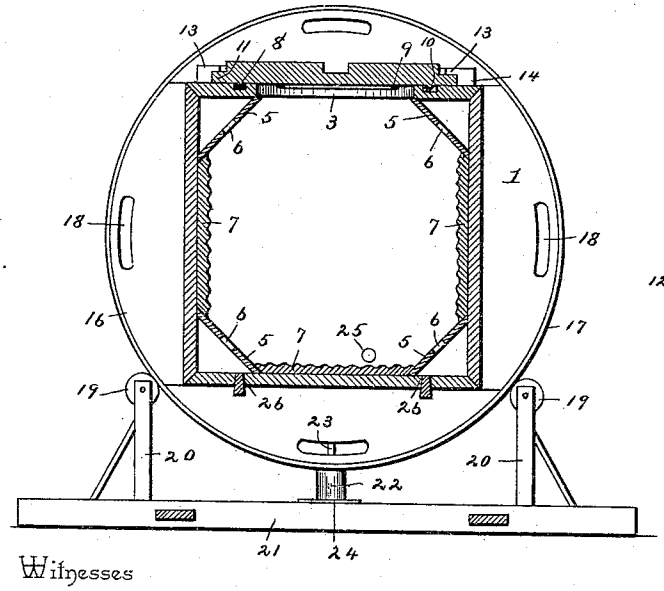

FIG. 4.

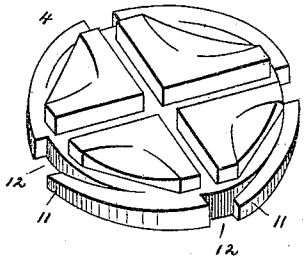

Witnesses

Harry L. Ames.

N. F. Riley

Inventor

Samuel B. Letson.

By his Attorneys,

C. A. Snow & Co.

THE NORRIS PETERS CO., PHOTO-LITHO., WASHINGTON, D. C.

UNITED STATES PATENT OFFICE.

SAMUEL B. LETSON, OF COLFAX, WASHINGTON.

WASHING-MACHINE.

SPECIFICATION forming part of Letters Patent No. 489,609, dated January 10, 1893.

Application filed September 14, 1892. Serial No. 445,879. (No model.)

To all whom it may concern:

Be it known that I, SAMUEL B. LETSON, a citizen of the United States, residing at Colfax, in the county of Whitman and State of Washington, have invented a new and useful Washing-Machine, of which the following is a specification.

The invention relates to improvements in washing machines.

The object of the present invention is to improve the construction of washing machines, and to enable clothes to be thoroughly washed without liability of tearing or otherwise injuring the fabrics.

The invention consists in the construction and novel combination and arrangement of parts hereinafter fully described, illustrated in the accompanying drawings and pointed out in the claims hereto appended.

In the drawings—Figure 1 is a perspective view of a washing machine embodying the invention. Fig. 2 is a longitudinal sectional view of the machine. Fig. 3 is a transverse sectional view of the same. Fig. 4 is a detail perspective view of the cover.

Like numerals of reference indicate corresponding parts in all the figures of the drawings.

1 designates a washing machine body of any suitable dimension, preferably substantially rectangular, provided with a transverse partition 2 forming separate washing compartments, and having circular openings 3 communicating with the compartments and closed during washing by removable covers 4. Each washing compartment is provided at its four corners with diagonally disposed partitions 5 which form buckets, and which are provided with elongated centrally disposed openings 6 through which water, steam, suds and the like are discharged when a bucket reaches the highest point during the rotation of the washing machine body. Between the buckets wash-boards 7 are arranged to provide a continuous rubbing surface, whereby during the rotation of the body, the clothes being washed will be moved over the rubbing surfaces of the wash-board; and when a bucket is at the lowest point, it fills with hot water and suds, and at the highest point, it discharges its contents upon the clothes, and in descending becomes filled with steam, and as soon as it enters the water on reaching the bottom or lowest point, the water in rushing into the bucket will force the steam out of the same causing the steam to move upward through the clothes, thereby greatly facilitating the removal of dirt and stain.

Around each opening 3 of the top of the body, is arranged a packing ring 8 of rubber, cork or similar material, and the cover 4 is circular and provided on its lower face with inner and outer circular ridges 9 and 10, the outer one of which fits against the packing ring to provide a perfectly steam, water and air tight joint, and the inner ridge forms a rubbing surface to be engaged by the clothes, and to make the rubbing surfaces of each compartment or chamber, continuous. The cover is provided at its periphery with segmental wedge-shaped flanges 11 which form recesses or intervals 12, and which are adapted to be engaged by lugs 13 of blocks 14 which are secured upon the top of the body at diametrically opposite points around the circular cover opening. By rotating the cover the wedge-shaped flanges engage the lugs and force the outer ridge tightly against the packing ring; and the upper face of the cover is provided with diametrically disposed grooves 15 adapted to permit a tool or instrument to obtain a hold upon the cover to secure it in place, or to remove it from engagement with the lugs.

The body is provided on each of its faces with transversely disposed segmental flanges 16 which form continuous circular flanges, and which are retained securely in place by tires 17. The end flanges are provided with hand-holes 18, and are supported by rollers 19 which are arranged at the upper ends of posts 20 of a rectangular supporting frame 21. The posts 20 are arranged at the corners of the frame and are supported by braces, and have their upper ends bifurcated to receive the rollers 19. This construction enables the body of the washing machine to be readily rotated without friction, and with little labor on the part of the operator. The segmental flanges are retained in engagement with the supporting rollers 19 and the body of the washing machine is prevented moving longitudinally by vertically disposed rolls 22, arranged at the ends of the frame or base 21,

and journaled on vertical bolts 23 which have their lower ends bent inward and enlarged to form securing plates 24 which are fastened to the upper faces of the end pieces or bars of the frame or base 21. The body is provided at each side near the bottom with a drain opening 25, and on the bottom near the corners of the same with drain openings 26; the drain openings 25 communicate with the washing chambers or compartments, and the other openings 26 communicate with the buckets; and all of these openings are closed when not in use by plugs or the like.

I desire it to be understood that I do not limit myself to the precise details of construction herein shown and described, as I may without departing from the spirit of the invention make minor changes therein, such as varying the shape of the body and the number of the compartments or washing chambers and the like.

What I claim is—

1. In a washing machine, the combination of a base provided at its ends with opposite horizontally disposed smooth faced supporting rollers, a washing machine body having circular tracks arranged upon the rollers and the vertically disposed rolls arranged at the ends of the base to retain the body on the rollers, substantially as described.

2. In a washing machine, the combination of a base provided at the corners with posts, smooth faced supporting rollers arranged at the tops of the posts, vertically disposed rolls arranged at the ends of the base, and the body provided on its exterior with segmental flanges forming a circular track and mounted upon the rollers and provided with hand holes, substantially as described.

3. In a washing machine, the combination of a base provided with horizontal supporting rollers, vertical rolls arranged at the ends of the base, a polygonal body provided on its exterior with circular tracks mounted on the diagonally disposed partitions arranged longitudinally of the corners of the body and forming buckets and provided with centrally disposed elongated discharge openings, and the wash-boards secured to the sides and bottom of the body and extending over the space between the partitions and supporting the same, substantially as described.

In testimony that I claim the foregoing as my own I have hereto affixed my signature in the presence of two witnesses.

SAMUEL B. LETSON.

Witnesses:
CHAS. D. SOUTH,
R. G. BLAIR.